Design and Simulation of a 7-Segment Logic Display for “MD ARIF” Using Canonical and K-Map Simplified Boolean Functions

Submitted To
Course Teacher: Dr. Tanbir Ibne Anowar
Course: Digital Logic and Circuits
Section: O
Department of Electrical & Electronic Engineering
American International University-Bangladesh

Submitted By
MD ARIF MAHMUD OYION
Student ID: 24-56305-1
Department of Computer Science and Engineering

Date of Submission
29/03/2026

Scan for report, simulation files, and project resources.

Abstract
This project presents the design and simulation of a 7-segment display system to show six letters of the name "MD ARIF." Each letter is encoded using 4 binary inputs (W, X, Y, Z) and decoded into 7 outputs (Fa to Fg) controlling the display segments.
Two implementation methods were followed:

1. **Direct Boolean functions (Canonical SOP)** from the truth table.
2. **Simplified Boolean functions** using Karnaugh Map (K-map) minimization.

Simulation was performed in NI Multisim using a Common Anode display. Output inversion was added to accommodate the active LOW configuration. Both methods were successfully verified, demonstrating the practical difference between unsimplified and optimized digital logic design.

1. Introduction

Digital logic design is fundamental in electronics and computer engineering. A 7-segment display is a practical example of a combinational output device used in calculators, clocks, counters, and control systems.
This project designed a 7-segment display system to represent six letters of the name **"MD ARIF"** using 4-bit input encoding and 7 output segments.

2. Objectives

Primary Objectives:

- Design a combinational logic circuit to display six letters of a name.
- Encode each character using 4 binary inputs.
- Decode inputs into 7 segment outputs (Fa to Fg).
- Derive Boolean expressions from truth tables.
- Simplify expressions using K-map.
- Simulate the design in Multisim.

Secondary Objectives:

- Compare direct Boolean implementation and K-map simplification.
- Learn the difference between theoretical logic and practical display interfacing.
- Gain experience in digital simulation and debugging.

3. Background Theory

A combinational logic circuit produces outputs based only on current input states.
Concepts Applied:

- Binary encoding
- Truth tables
- Sum of Products (SOP)
- Boolean algebra
- Karnaugh Map simplification
- Logic gate implementation
- Active HIGH vs Active LOW outputs
- 7-segment display interfacing

4. Project Overview

Stages:

1. Character selection
2. 4-bit binary encoding
3. Segment pattern definition
4. Truth table construction
5. Direct Boolean expression derivation
6. K-map simplification
7. Circuit implementation in Multisim
8. Output inversion for Common Anode
9. Simulation verification

Two versions were implemented:

- **Version 1:** Direct canonical Boolean expressions
- **Version 2:** K-map simplified Boolean expressions

5. Selection of Characters

Chosen characters from "MD ARIF":

Serial	Character
1	M
2	d
3	A
4	r
5	I
6	F

6. Character Display Feasibility on 7-Segment

A 7-segment display cannot represent all alphabetic characters perfectly. Therefore, some letters were approximated.

- The character M cannot be displayed accurately on a 7-segment display.
- Therefore, an approximate representation visually similar to H was used for M.
- The characters d, A, r, I, and F can be displayed more clearly.

This is a common limitation of 7-segment display systems.

7. 7-Segment Display Fundamentals

A 7-segment display consists of seven individually controllable LED segments labeled **a, b, c, d, e, f, and g**.

By turning specific segments ON or OFF, different numerical digits and a limited set of alphabetic characters can be displayed.

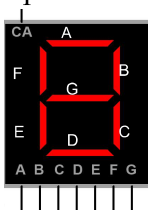

Each segment is independently controlled to form numbers or letters.

8. Common Anode Display Theory

In a Common Anode 7-segment display, all LED anodes are internally connected together and tied to the positive supply voltage. A segment turns ON when logic 0 is applied to its cathode terminal (active LOW), and it turns OFF when logic 1 is applied.

9. Binary Character Encoding

W	X	Y	Z	Character
0	0	0	0	M
0	0	0	1	d
0	0	1	0	A
0	0	1	1	r
0	1	0	0	I
0	1	0	1	F

10. Segment Mapping and Character Representation

Character	a	b	c	d	e	f	g
M	0	1	1	0	1	1	1
d	0	1	1	1	1	0	1
A	1	1	1	0	1	1	1
r	0	0	0	0	1	0	1
I	0	0	0	0	1	1	0
F	1	0	0	0	1	1	1

The above table shows the intended segment activation pattern before inversion for the Common Anode display.

11. Truth Table

W	X	Y	Z	Char	a	b	c	d	e	f	g
0	0	0	0	M	0	1	1	0	1	1	1
0	0	0	1	d	0	1	1	1	1	0	1
0	0	1	0	A	1	1	1	0	1	1	1
0	0	1	1	r	0	0	0	0	1	0	1
0	1	0	0	I	0	0	0	0	1	1	0
0	1	0	1	F	1	0	0	0	1	1	1

Note: The truth table values shown above represent the logical segment outputs before inversion. Since a Common Anode display is active LOW, the final outputs applied to the display were inverted in the Multisim circuit.

12. Canonical Boolean Functions (Direct SOP)

Fa = w'x'yz' + w'xy'z
Fb = w'x'y'z' + w'x'y'z + w'x'yz'
Fc = w'x'y'z' + w'x'y'z + w'x'yz'
Fd = w'x'y'z
Fe = w'x'y'z' + w'x'y'z + w'x'yz' + w'x'yz + w'xy'z' + w'xy'z
Ff = w'x'y'z' + w'x'yz' + w'xy'z' + w'xy'z
Fg = w'x'y'z' + w'x'y'z + w'x'yz' + w'x'yz + w'xy'z

13. Karnaugh Map Analysis and Simplification

The standard 4-variable Karnaugh Map format was used:

- Rows = WX → 00, 01, 11, 10
- Columns = YZ → 00, 01, 11, 10

So each cell corresponds to a minterm:

WX \ YZ	00	01	11	10
00	m0	m1	m3	m2
01	m4	m5	m7	m6
11	m12	m13	m15	m14
10	m8	m9	m11	m10

1) K-map for Fa

Given SOP : Fa=w′x′yz′+w′xy′z

Minterms

- w′x′yz′=m2
- w′xy′z=m5

So: Fa=Σm(2,5)

K-map of Fa

WX \ YZ	00	01	11	10
00	0	0	0	1
01	0	1	X	X
11	X	X	X	X
10	X	X	X	X

Simplified Result: **Fa=w′x′yz′+w′xy′z**

2) K-map for Fb

Given SOP: Fb=w′x′y′z′+w′x′y′z+w′x′yz′

Minterms

- w′x′y′z′=m0
- w′x′y′z=m1
- w′x′yz′=m2

So: Fb=Σm(0,1,2)

K-map of Fb

WX \ YZ	00	01	11	10
00	1	1	0	1
01	0	0	X	X
11	X	X	X	X
10	X	X	X	X

Grouping

- Group m0 and m1 → w′x′y′
- Group m0 and m2 → w′x′z′

Simplified Result: **Fb=w′x′y′+w′x′z′**

3) K-map for Fc

Given SOP: Fc=w′x′y′z′+w′x′y′z+w′x′yz′

Minterms

- w′x′y′z′=m0
- w′x′y′z=m1
- w′x′yz′=m2

So: Fc=Σm(0,1,2)

K-map of Fc

WX \ YZ	00	01	11	10
00	1	1	0	1
01	0	0	X	X
11	X	X	X	X
10	X	X	X	X

Grouping

- Group m0 and m1 → w′x′y′
- Group m0 and m2 → w′x′z′

Simplified Result: **Fc=w′x′y′+w′x′z′**

4) K-map for Fd
Given SOP
Fd=w′x′y′z
Minterms: w′x′y′z=m1
So: Fd=Σm(1)
K-map of Fd

WX \ YZ	00	01	11	10
00	0	1	0	0
01	0	0	X	X
11	X	X	X	X
10	X	X	X	X

Simplified Result**: Fd=w′x′y′z**
5) K-map for Fe
Given SOP
Fe=w′x′y′z′+w′x′y′z+w′x′yz′+w′x′yz+w′xy′z′+w′xy′z
Minterms:
- m0,m1,m2,m3,m4,m5

So:
Fe=Σm(0,1,2,3,4,5)
K-map of Fe

WX \ YZ	00	01	11	10
00	1	1	1	1
01	1	1	X	X
11	X	X	X	X
10	X	X	X	X

Grouping
- Group entire top row m0,m1,m2,m3 → w′x′
- Group m0,m1,m4,m5 → w′y′

Simplified Result: Fe=w′x′+w′y′

6) K-map for Ff
Given SOP
Ff=w′x′y′z′+w′x′yz′+w′xy′z′+w′xy′z
Minterms
- m0,m2,m4,m5

So:
Ff=Σm(0,2,4,5)
K-map of Ff

WX \ YZ	00	01	11	10
00	1	0	0	1
01	1	1	X	X
11	X	X	X	X
10	X	X	X	X

Grouping
- Group m0 and m2 → w′x′z′
- Group m4 and m5 → w′xy′

Simplified Result: Ff=w′x′z′+w′xy′

7) K-map for Fg

Given SOP : Fg=w′x′y′z′+w′x′y′z+w′x′yz′+w′x′yz+w′xy′z

Minterms: M0,m1,m2,m3,m5

So: Fg=Σm(0,1,2,3,5)

K-map of Fg

WX \ YZ	00	01	11	10
00	1	1	1	1
01	0	1	X	X
11	X	X	X	X
10	X	X	X	X

Grouping: Group m0,m1,m2,m3 → w′x′

Group m1 and m5 → w′y′z

Simplified Result : **Fg=w′x′+w′y′z**

Final K-map Simplification Summary

Function	Minterms	Simplified Result
Fa	Σm(2,5)	w′x′yz′+w′xy′z
Fb	Σm(0,1,2)	w′x′y′+w′x′z′
Fc	Σm(0,1,2)	w′x′y′+w′x′z′
Fd	Σm(1)	w′x′y′z
Fe	Σm(0,1,2,3,4,5)	w′x′+w′y′
Ff	Σm(0,2,4,5)	w′x′z′+w′xy′
Fg	Σm(0,1,2,3,5)	w′x′+w′y′z

14. Simplified Boolean Functions (Factored Form)

Segment	**Simplified Expression**
Fa	w'(x'yz' + xy'z)
Fb	w'x'(y' + z')
Fc	w'x'(y' + z')
Fd	w'x'y'z
Fe	w'(x' + y')
Ff	w'(x'z' + xy')
Fg	w'(x' + y'z)

These simplified expressions are suitable for efficient Multisim implementation using fewer logic gates than the canonical SOP form.

15. Comparison: Direct vs Simplified

Feature	**Direct SOP**	**K-map Simplified**
Gate count	High	Lower
Wiring	Complex	Simple
Readability	Moderate	Better
Hardware efficiency	Low	High
Simulation output	Correct	Correct

The K-map simplified functions reduce circuit complexity while preserving the same correct display output.

16–17. Circuit Design & Multisim Implementation

Display of selected characters one at a time:

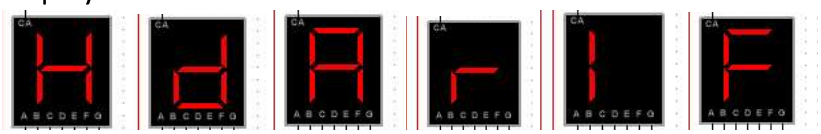

Version 1: Direct Boolean expressions

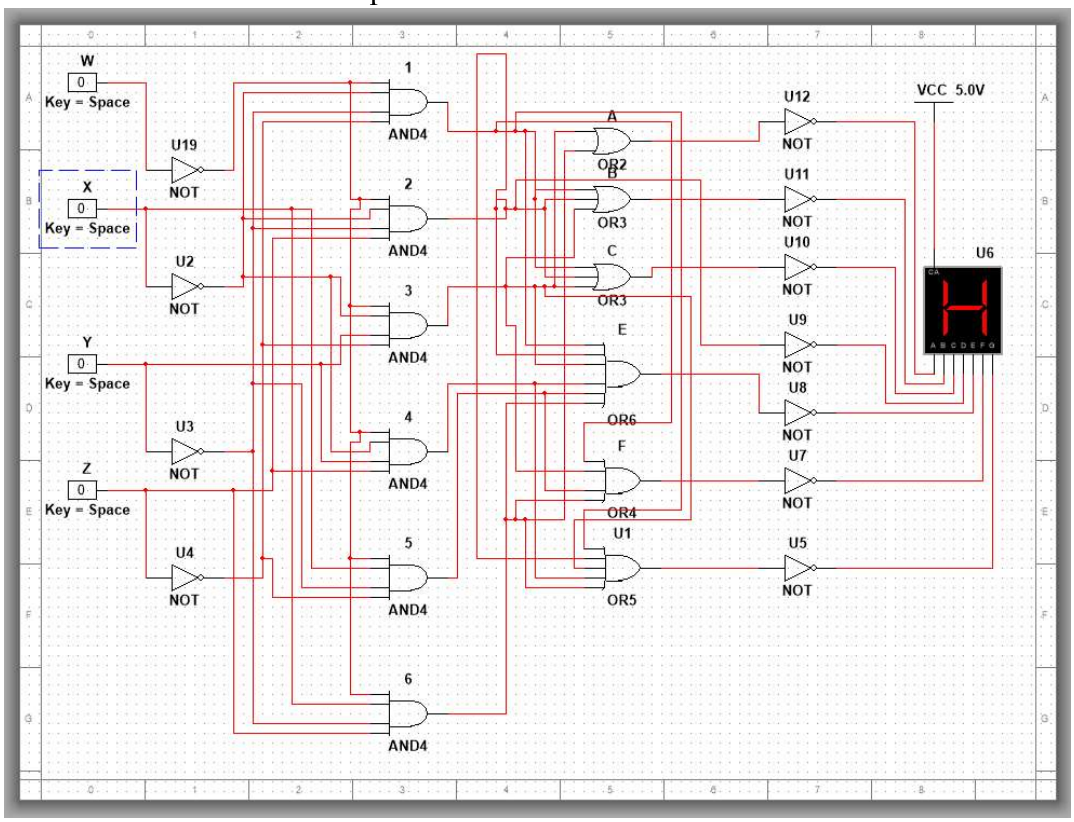

Figure 1: Input 0000 output H(M)

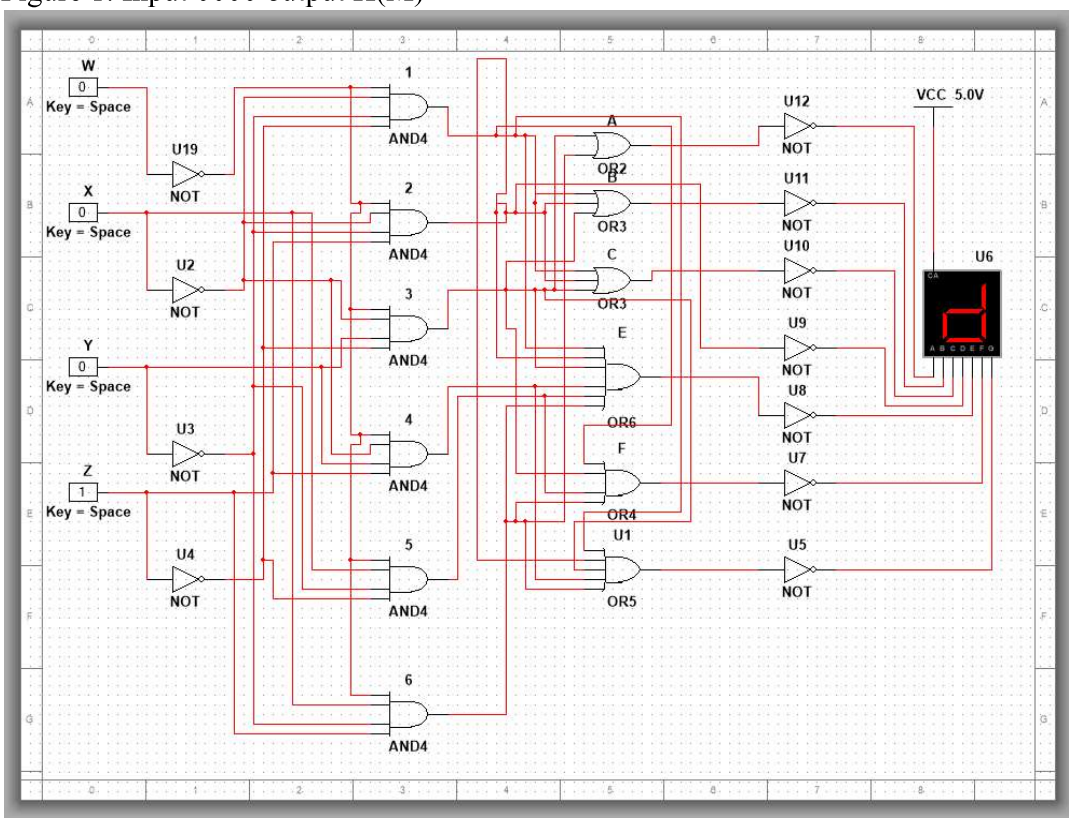

Figure 2: Input 0001 output d

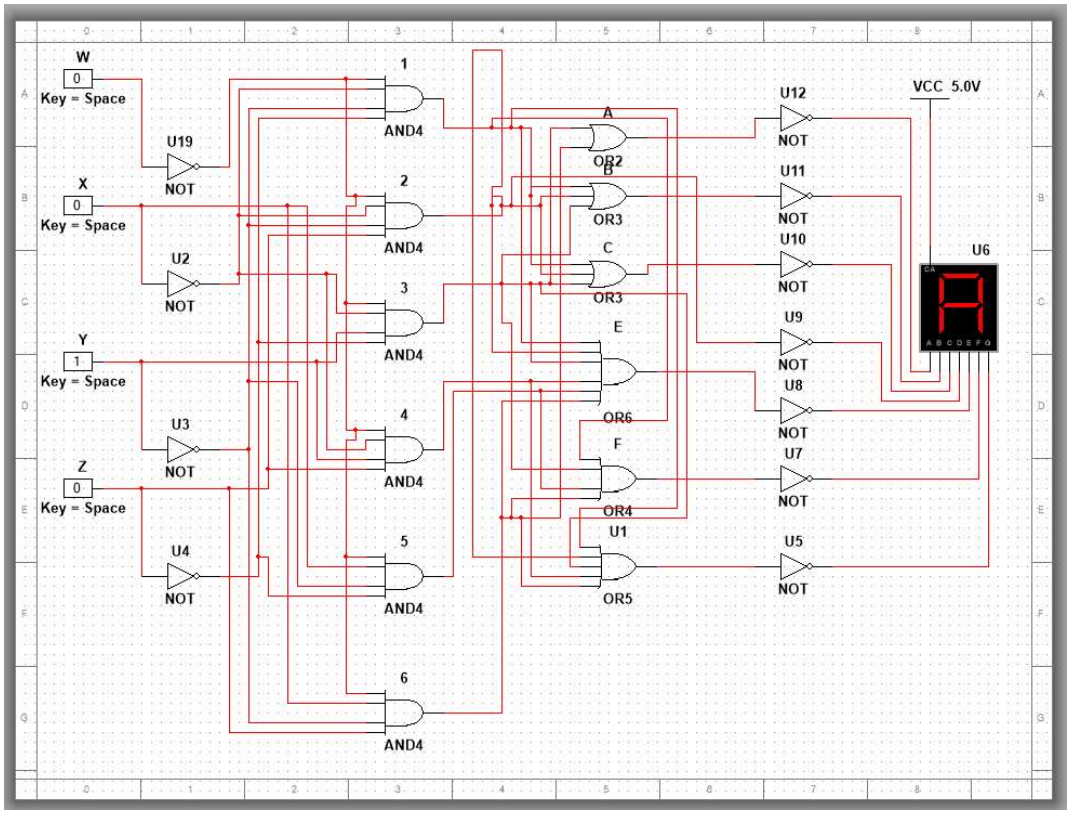

Figure 3: Input 0010 Output A

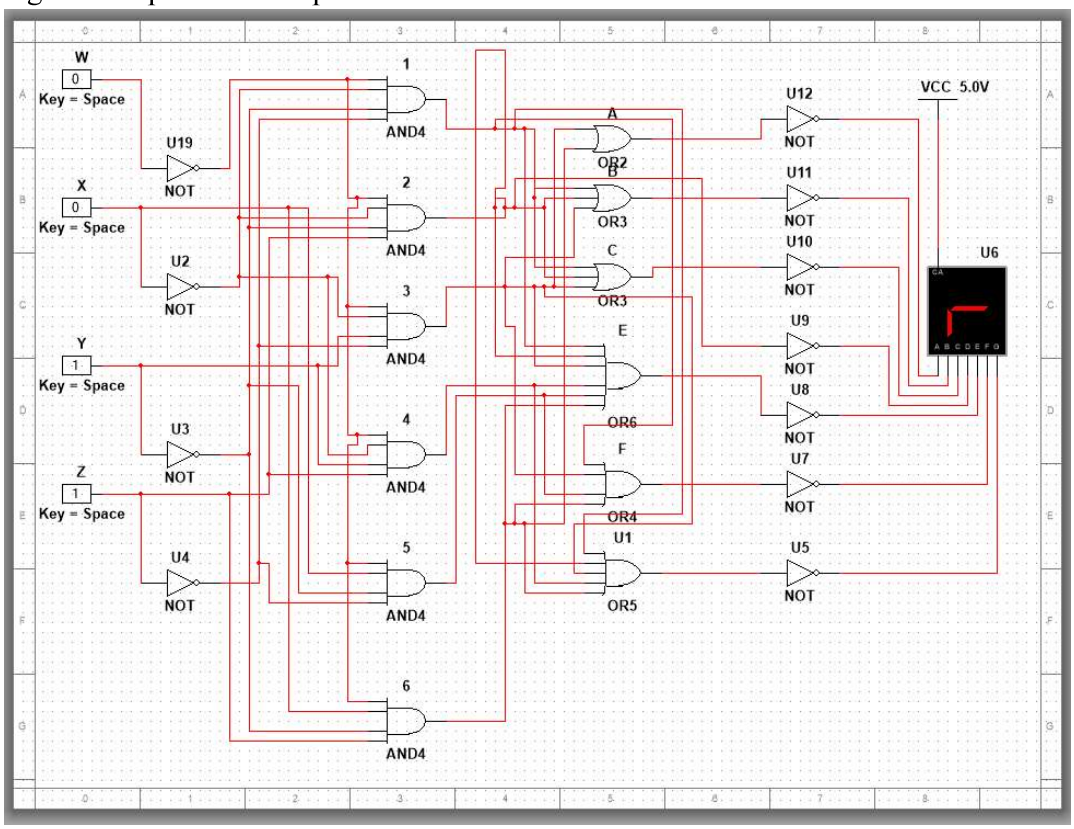

Figure 4: Input 0011 output r

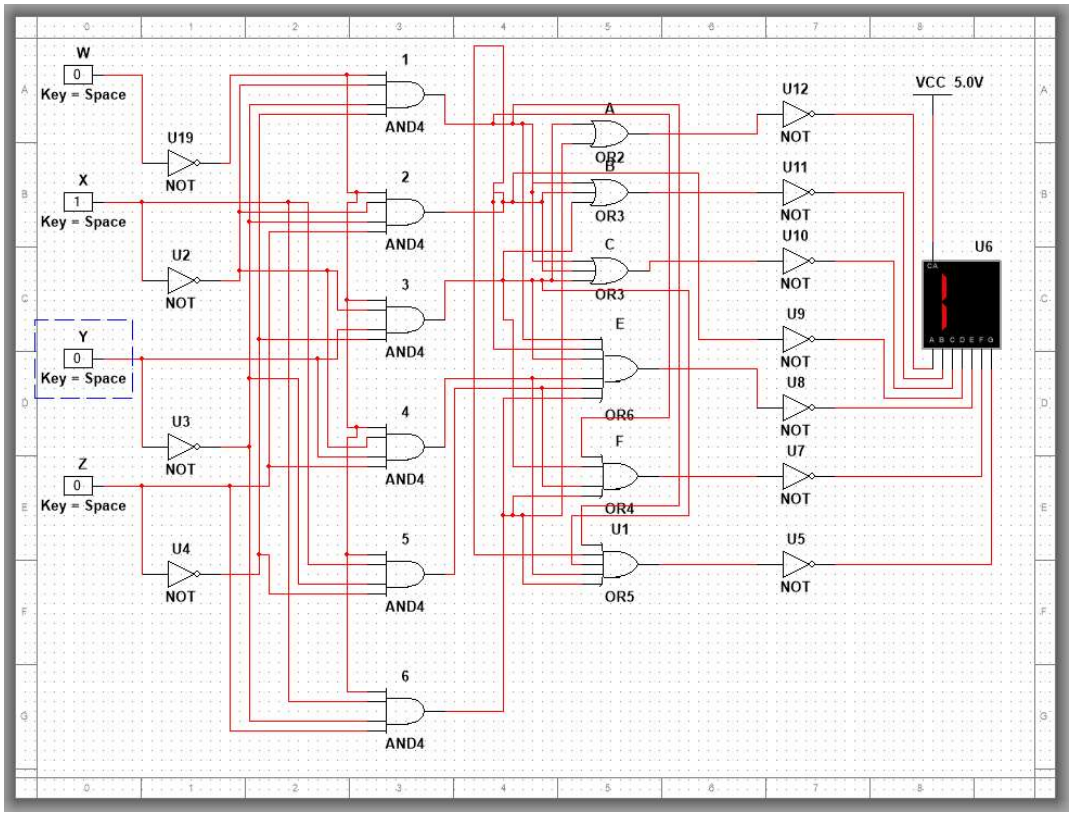

Figure 5: Input 0100 output I

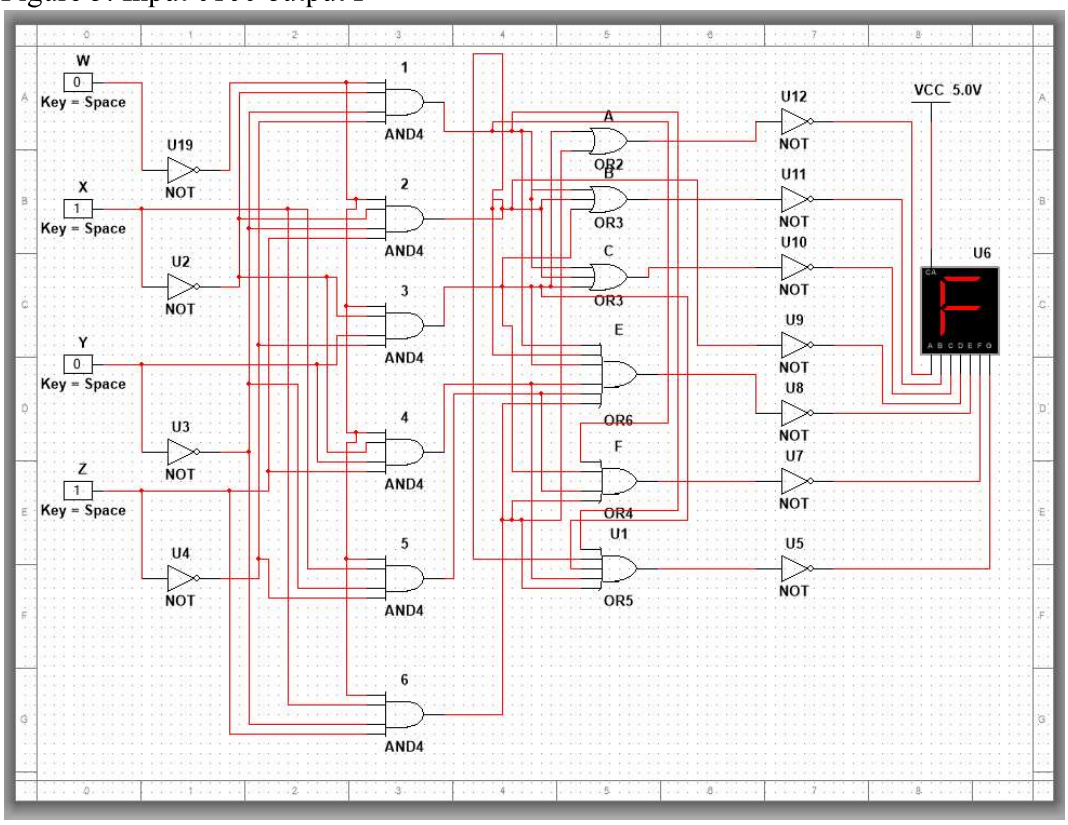

Figure 6: Input 0101 output f

Version 2: K-map simplified expressions → Fewer gates, cleaner layout

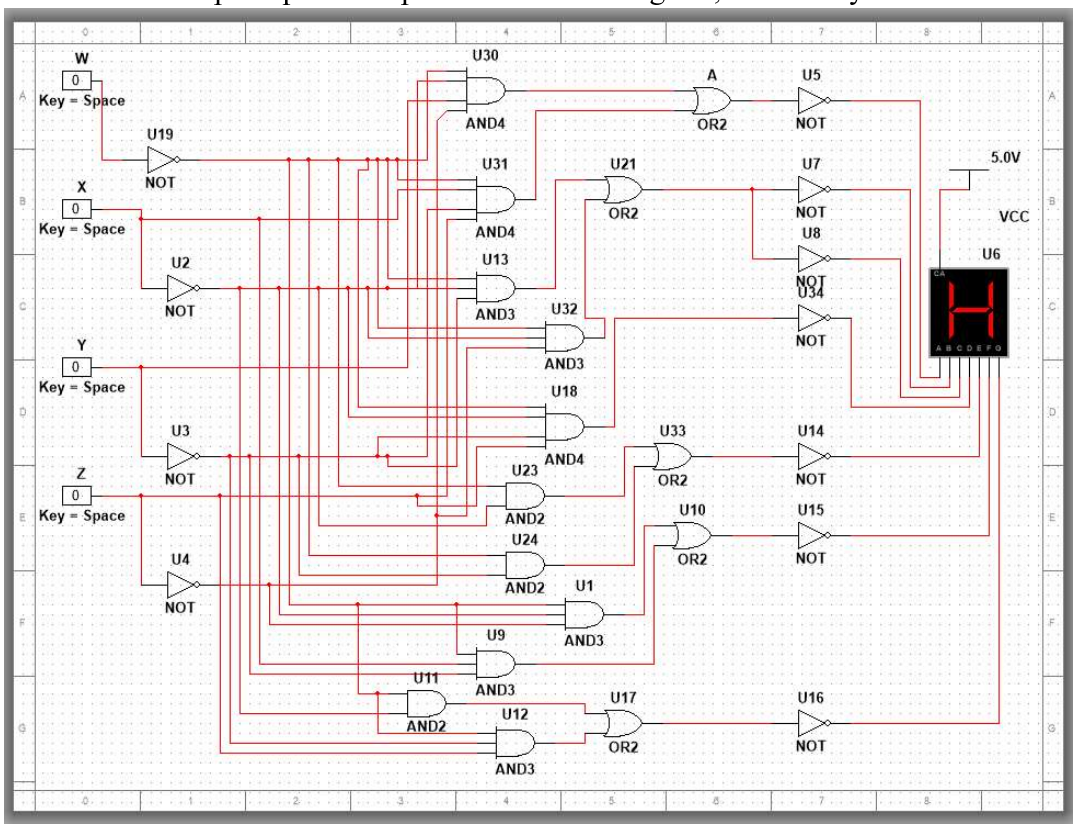

Figure 7: Input 0000 output H(M)

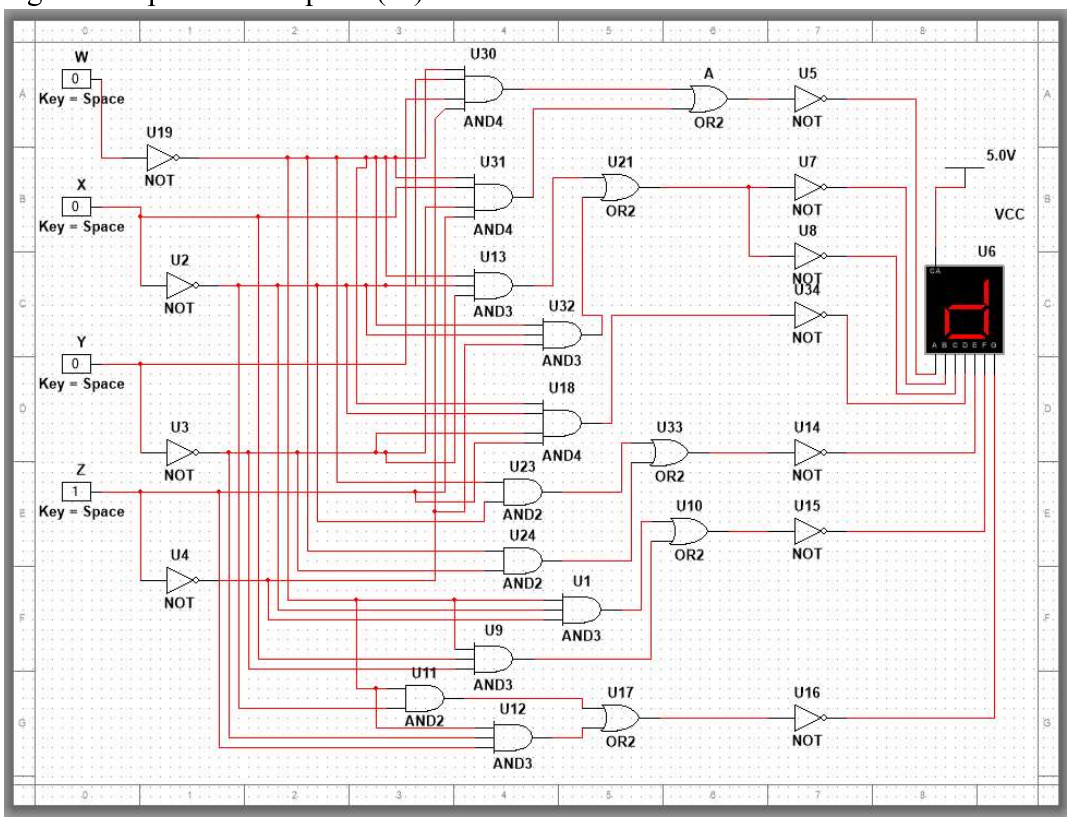

Figure 8: Input 0001 output d

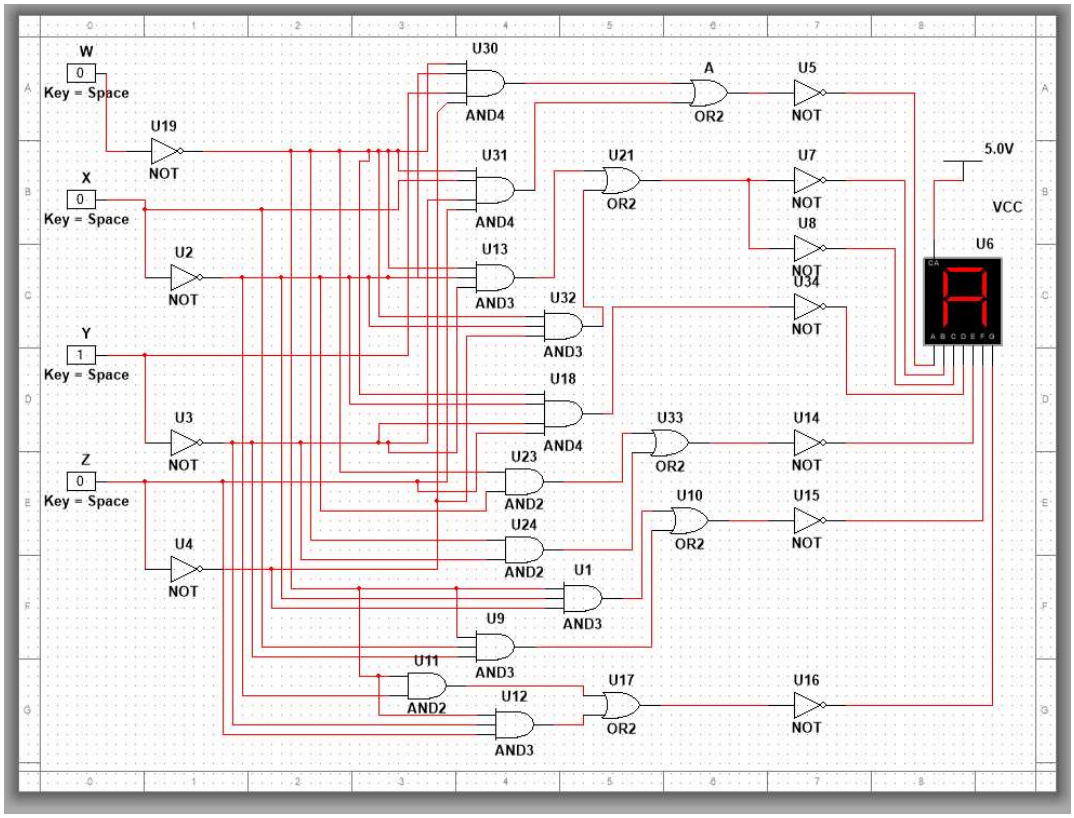

Figure 9: Input 0010 output A

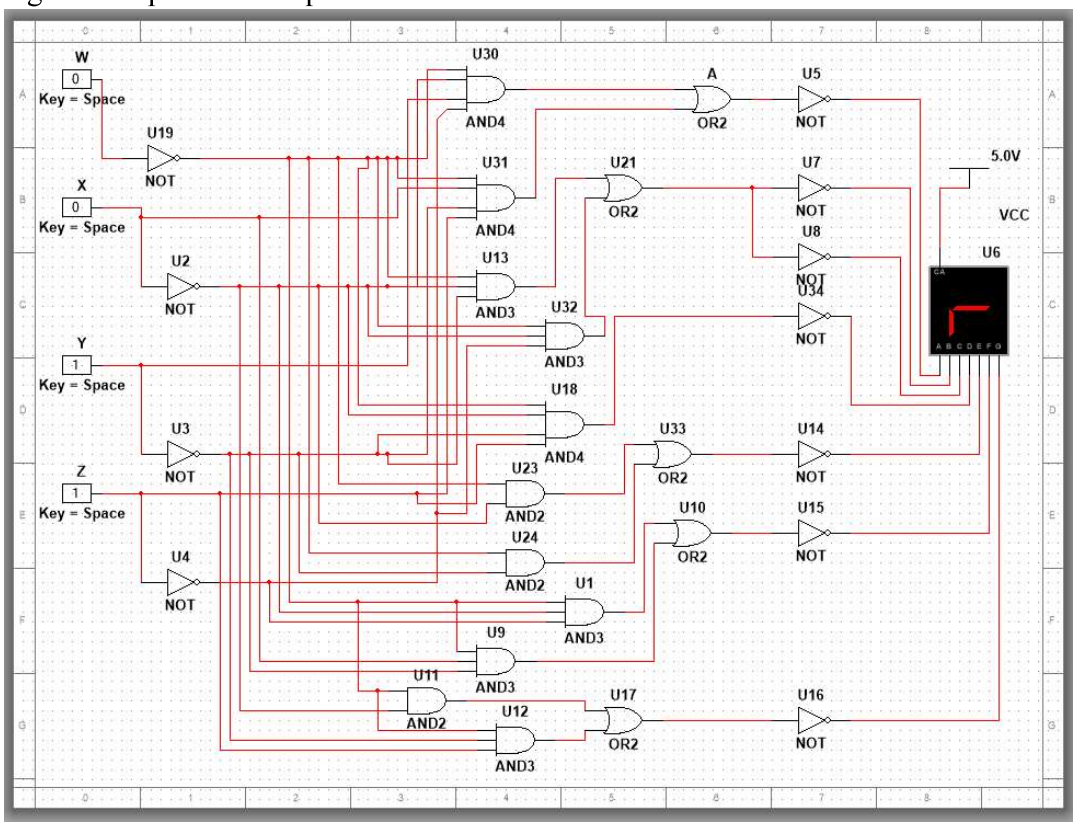

Figure 10: Input 0011 output r

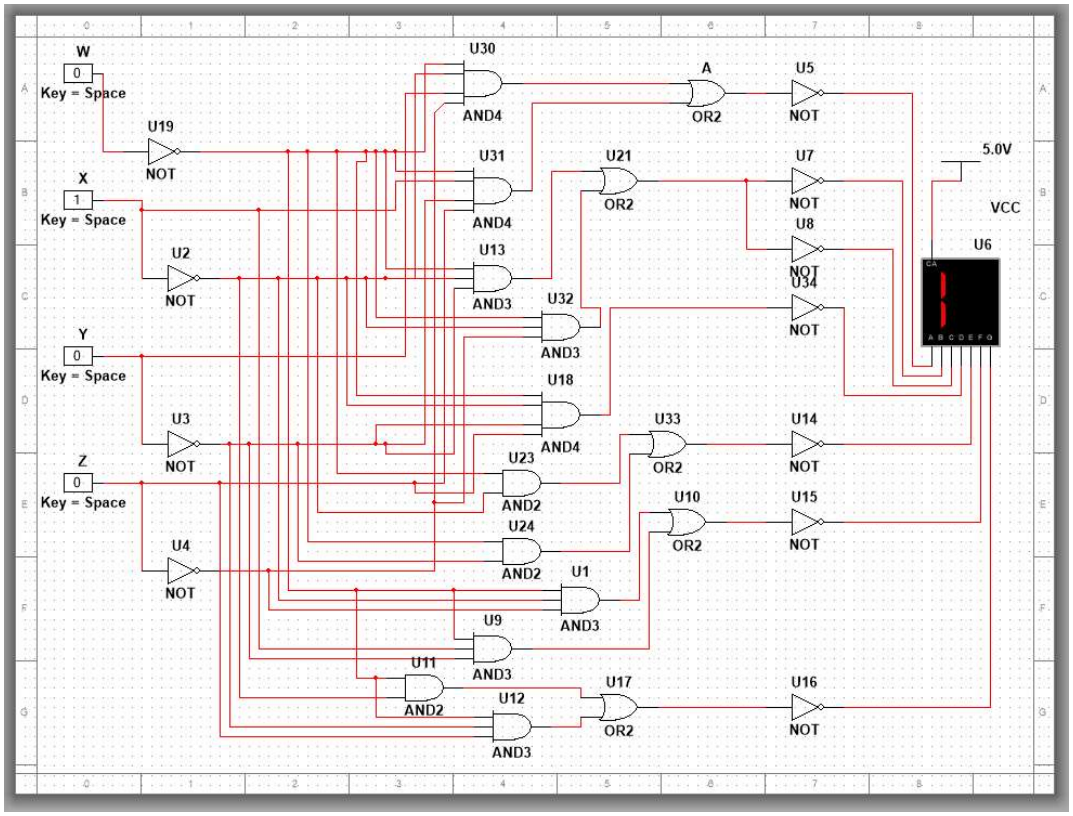

Figure 11: Input 0100 output I

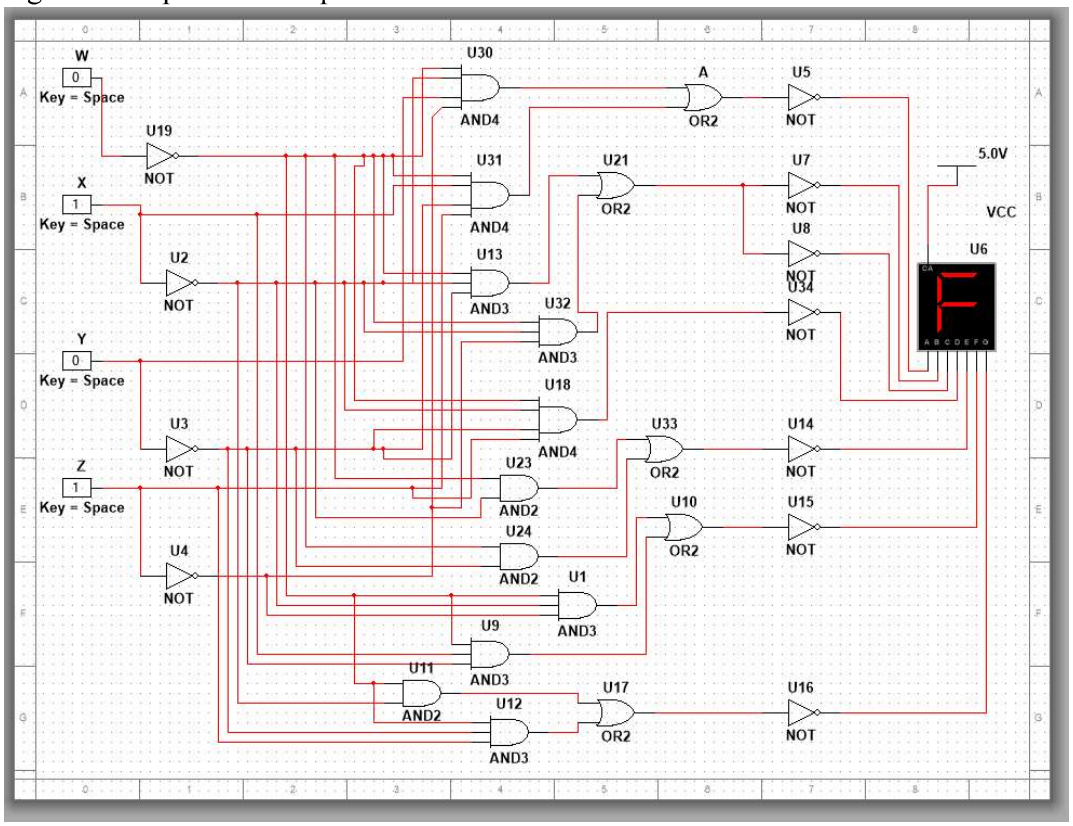

Figure 12: Input 0101 output f

Procedure:

1. Inputs W, X, Y, Z
2. Generate complements with NOT gates
3. Implement expressions (AND–OR)
4. Invert outputs for Common Anode
5. Connect to display
6. Test all characters

18. Output Inversion for Common Anode

- NOT gates added to all outputs (a–g)
- Active LOW input required for display

a = Fa'
b = Fb'
c = Fc'
d = Fd'
e = Fe'
f = Ff'
g = Fg'

19. Experimental Procedure

The experiment was carried out by first assigning 4-bit binary input combinations to each selected character. A truth table was then prepared, followed by the derivation of canonical SOP expressions for each output segment. These expressions were simplified using Karnaugh Maps and implemented in NI Multisim. Finally, output inversion was added to match the active LOW behavior of the Common Anode display.

20. Working Principle and Observation

The 4-bit input combination determines which character is selected for display. Based on the corresponding Boolean logic expressions, the required output segments are activated. During simulation, all selected letters were displayed correctly according to their assigned input combinations.

21. Result Analysis

Both the direct SOP implementation and the simplified K-map implementation produced correct output patterns. However, the K-map simplified circuit required fewer logic gates and less wiring, making it more efficient, compact, and easier to implement.

22. Advantages

This project helped in understanding Boolean logic, truth tables, and practical Karnaugh Map simplification. It also improved logic gate implementation skills, display interfacing knowledge, and debugging experience in digital circuit simulation.

23. Disadvantages / Limitations

One major limitation of the project is that not all alphabetic characters can be represented accurately on a 7-segment display. In addition, the Common Anode configuration requires output inversion, and the overall wiring becomes more complex when more characters are added. Manual derivation of Boolean expressions can also be time-consuming.

24. Applications
This type of 7-segment display logic system can be used in:

- Digital name or ID display systems
- Educational digital logic and circuit design projects
- Embedded display units
- Alphanumeric indication systems
- Simple control and status display applications

25.Significance of the Project This project demonstrates how theoretical concepts of digital logic, such as truth tables, Boolean expressions, and Karnaugh Map simplification, can be applied to a practical hardware-oriented display system. It highlights the importance of logic optimization in reducing circuit complexity, hardware cost, and implementation difficulty.

26. Conclusion
This project successfully implemented a 7-segment display logic system to represent the selected letters of the name “MD ARIF” using both direct canonical Boolean expressions and Karnaugh Map simplified expressions. Both approaches were successfully verified in NI Multisim. The simplified implementation required fewer logic gates and reduced wiring complexity, clearly demonstrating the practical importance of Boolean minimization in digital circuit design.

References:

[1] T. L. Floyd, Digital Fundamentals, 9th ed. Upper Saddle River, NJ, USA: Prentice Hall, 2010.

[2] M. M. Mano, Digital Logic & Computer Design. Upper Saddle River, NJ, USA: Prentice Hall, 2008.

[3] R. J. Tocci and N. S. Widmer, Digital Systems, 7th ed. Upper Saddle River, NJ, USA: Prentice Hall, 2007.